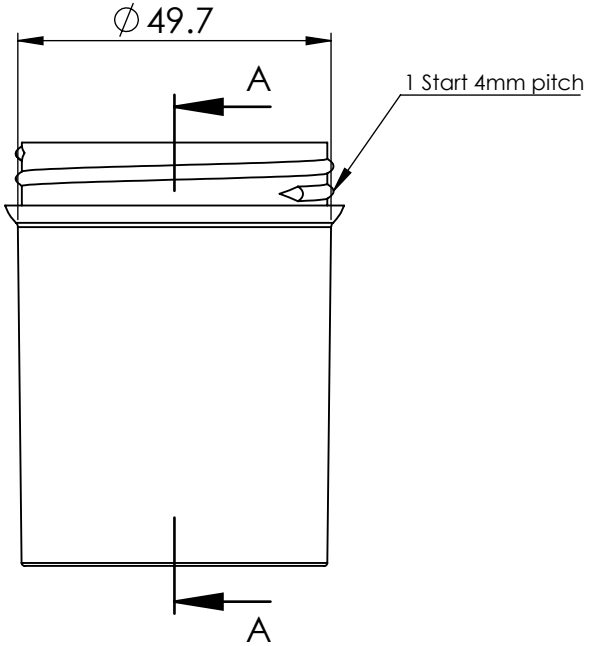

FRONT VIEW

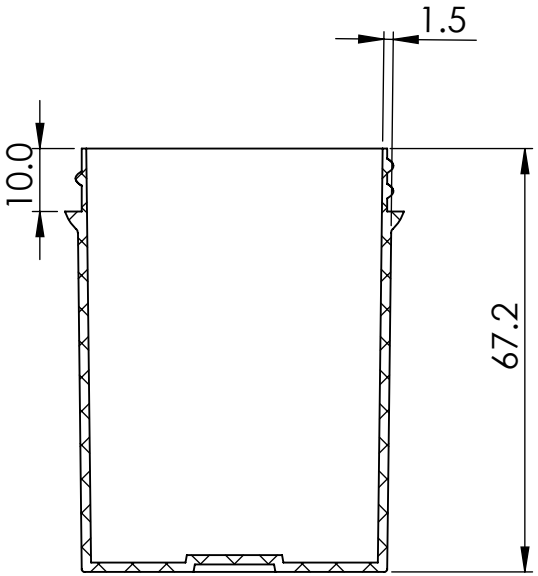

SECTION A-A
SCALE 1 : 1.2

ISOMETRIC VIEW

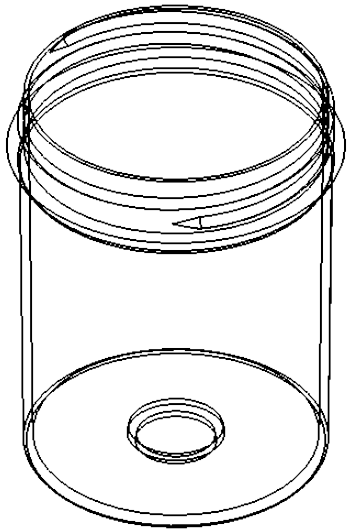

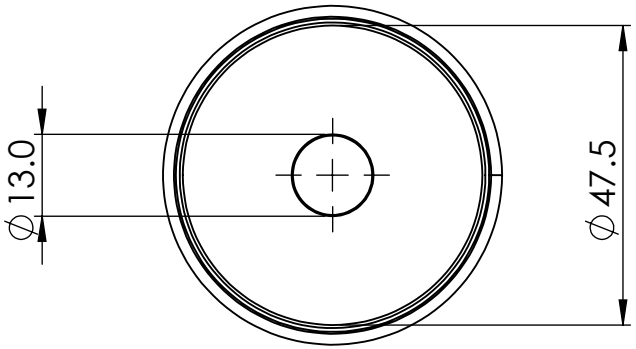

BOTTOM VIEW

PROPRIETARY AND CONFIDENTIAL

THE INFORMATION CONTAINED IN THIS DRAWING IS THE SOLE PROPERTY OF ANCOR PLASTICS Pty Ltd, ANY REPRODUCTION IN PART OR AS A WHOLE WITHOUT WRITTEN PERMISION IS PROHIBITED

UNLESS OTHERWISE SPECIFIED		NAME	DATE
DIMENSIONS ARE IN MM	DRAWN	DP	17/11/22
	CHECKED		
MATERIAL	ENG APPR		
GPPS	MFG APPR		
	QA		
FINISH	COMMENTS:		
	TOLERANCES: ± 0.5mm		

INTERNATIONAL MOULDED PLASTICS PTY LTD
SPECIALISTS IN INJECTION MOULDING & TOOLMAKING

TITLE P407S 115ml Jar

SIZE	DRG. NO.	REV
	002	1

SCALE 1:2	WEIGHT 17g	SHEET 1 OF 1